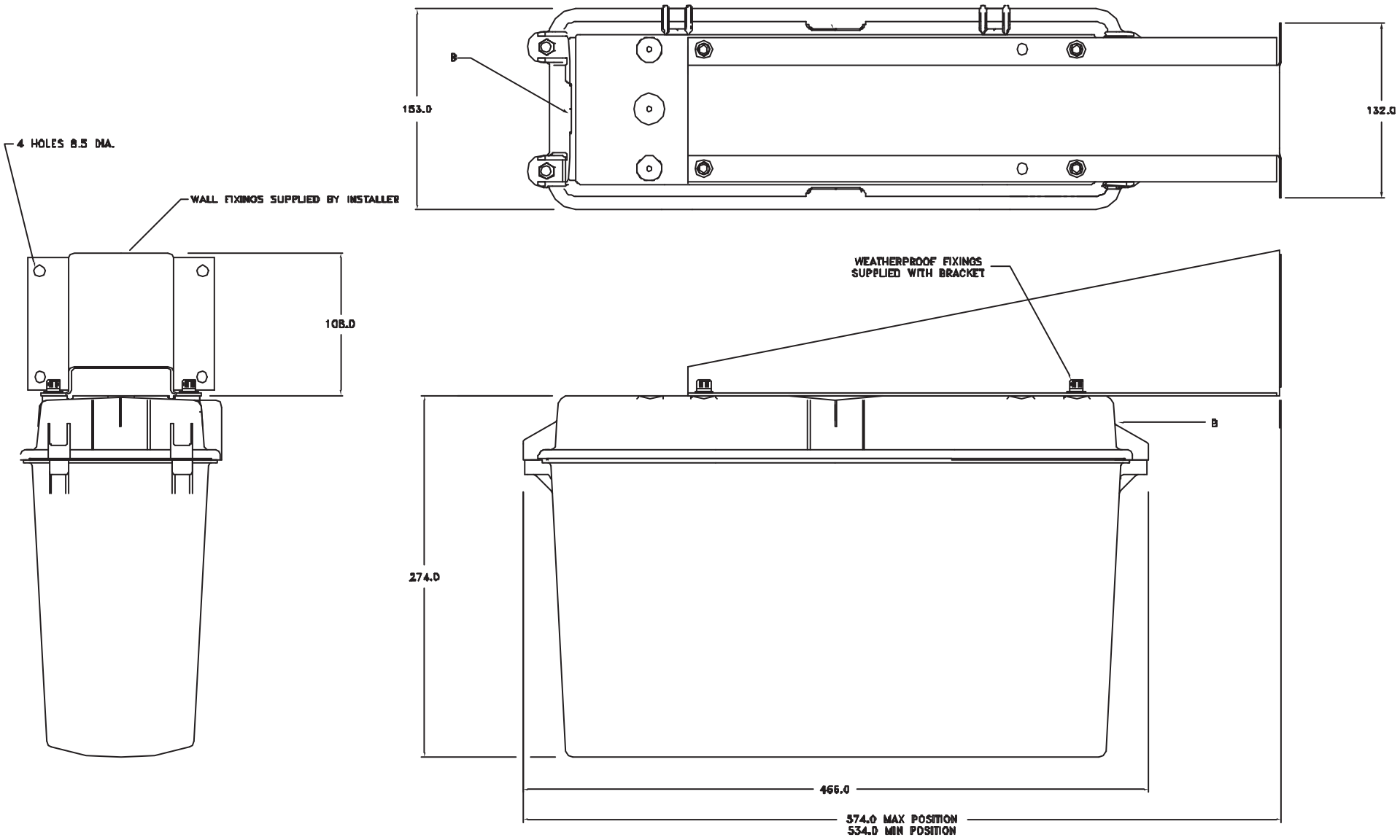
4 HOLES 8.5 DIA.
WALL FIXINGS SUPPLIED BY INSTALLER
108.0
B
153.0
132.0
WEATHERPROOF FIXINGS
SUPPLIED WITH BRACKET
B
274.0
466.0
374.0 MAX POSITION
534.0 MIN POSITION

WQFCLL

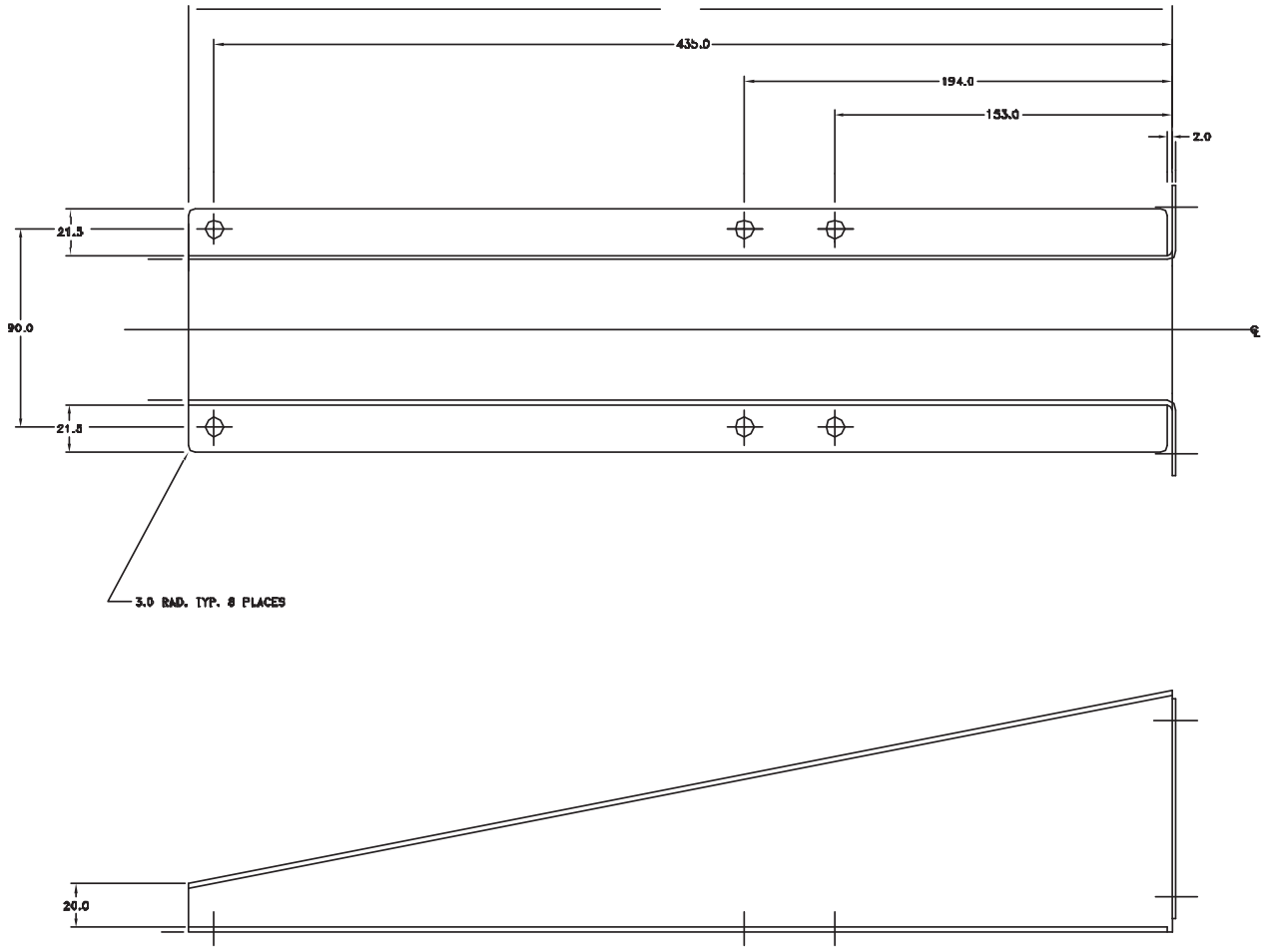
435.0
194.0
153.0
2.0
21.5
90.0
21.5
3.0 RAD. TYP. 8 PLACES
20.0

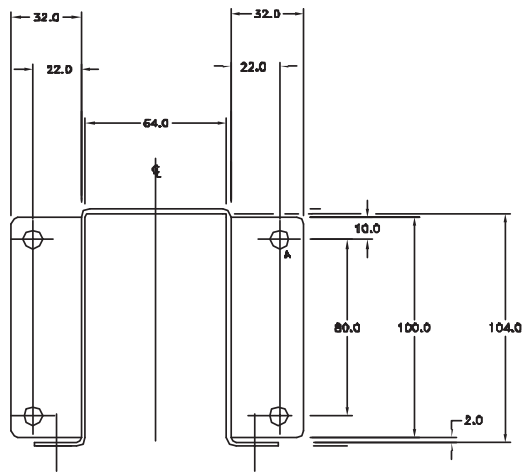
32.0
32.0
22.0
22.0
64.0
10.0
80.0
100.0
104.0
2.0

WQFCLL